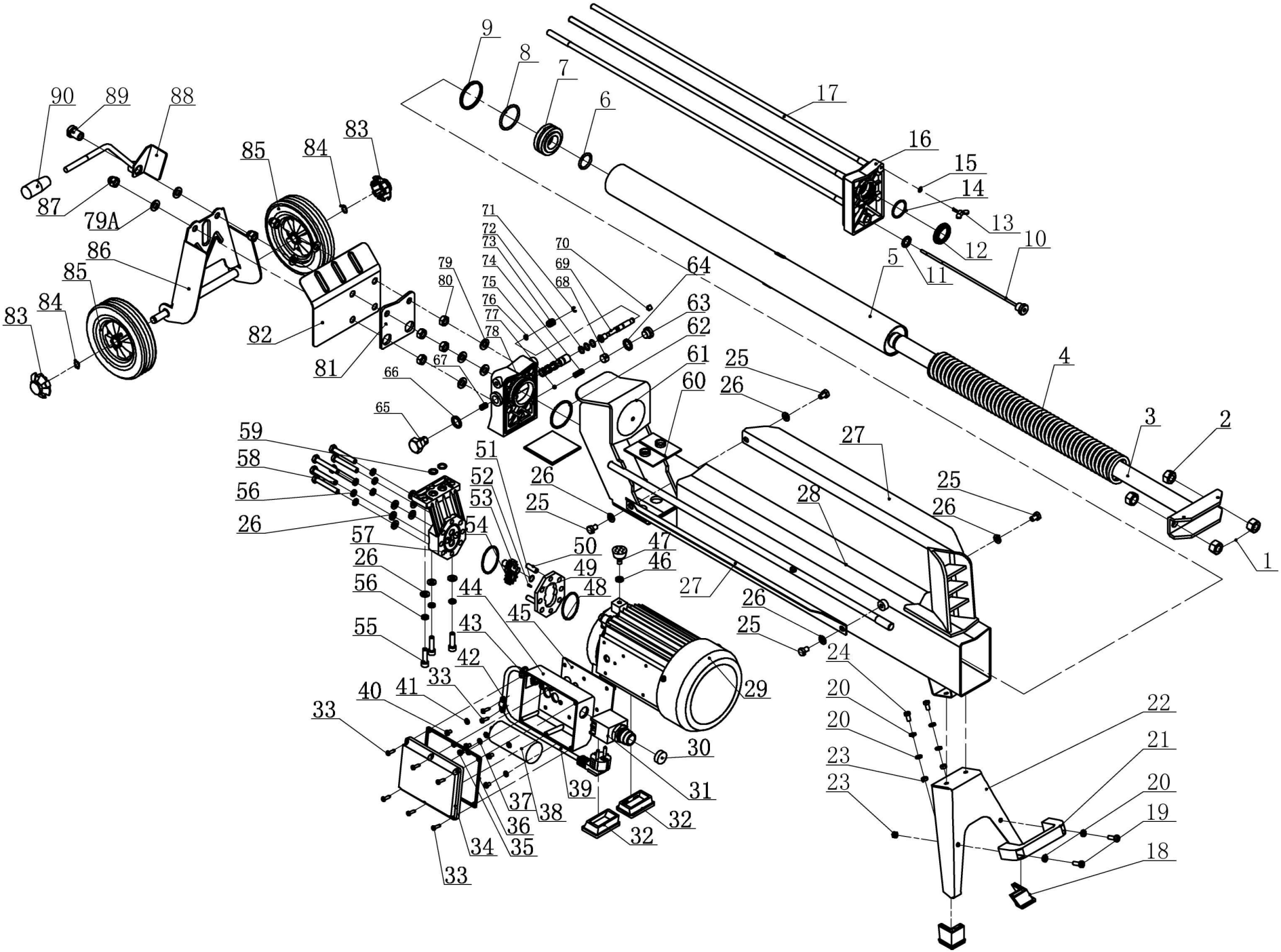
1
2
3
4
5
6
7
8
9
10
11
12
13
14
15
16
17
18
19
20
21
22
23
24
25
26
27
28
29
30
31
32
33
34
35
36
37
38
39
40
41
42
43
44
45
46
47
48
49
50
51
52
53
54
55
56
57
58
59
60
61
62
63
64
65
66
67
68
69
70
71
72
73
74
75
76
77
78
79
80
81
82
83
84
85
86
87
88
89
90
79A

序号	Name	零件名称	数量
1	Nut m14	非金属嵌件自锁螺母 m14	2
2	Hexagonal Nut m14	六角螺母 m14	2
3	Hammer Ram	活塞杆组件	1
4	Spring	活塞杆回位弹簧	1
5	Cylinder	油缸	1
6	o-Ring Oil Seal 25x3.55	o 形橡胶密封圈 25x3.55	1
7	Piston	活塞	1
8	o-Ring Oil Seal 43.7x3.55	o 形橡胶密封圈 43.7x3.55	1
9	o-Ring 55	格莱圈 55	1
10	Dip Stick	油标尺	1
11	o-Ring Oil Seal 14	组合密封垫圈 14	1
12	Dh Dustproof Seal Dh30	Dh 型防尘圈 Dh30	1
13	o-Ring Oil Seal 30x2.65	放气螺钉	1
14	Bleed Screw	o 形橡胶密封圈 30x2.65	1
15	o-Ring Oil Seal 8x1.9	o 形橡胶密封圈 7x1.9	1
16	Oil Cylinder Cover	油缸盖	1
17	Screw Stud m10	双头螺丝 m10	4
18	Supporting Foot Cover	支承脚套	2
19	Philips Screw m6x20	十字槽盘头螺钉 m6x20	2
20	Gasket 6	平垫圈 6	6
21	Carrying Handle	提手	1
22	Supporting Foot	支承脚	1
23	Nut m6	非金属嵌件自锁螺母 m6	4
24	Hex bolt m6x12	外六角螺栓 m6x12	2
25	Hex bolt m8x12	外六角螺栓 m8x12	4
26	Gasket 8	平垫圈 8	13
27	Log Guiding Plate	圆木导向板	2
28	Main Body	油缸主体	1
29	Electric Motor	电机组件	1
30	Switch Dust Shield	开关防水罩	1
31	Switch	开关	1
32	Rubber Support For Motor	电机脚套	2
33	Nut m4x16	十字槽盘头自攻螺钉 m4x16	8
34	Switch Case Cover	开关盒盖	1
35	Screw m5x6	十字槽盘头螺钉 m5x6	1
36	Waterproof Seal For Switch Case	开关盒盖防水垫圈	1
37	Spring Washer 5	弹簧垫圈 5	1
38	Capacitor	电容	1
39	Cord	电源线	1
40	Philips Screw m5x8	十字槽盘头螺钉 m5x10	3
41	Gasket 5	平垫圈 5	4
42	Cord Pressed Plate	压线板	1
43	Faucet	拉不脱组件	1
44	Switch Case	开关盒	1
45	Waterproof Seal For Switch Case	开关盒防水垫圈	1
46	Hexagonal Nut (Thin) m8	六角薄螺母 m8	1
47	Motor Supporting (Up)	电机支承脚	1
48	o-Ring Oil Seal 50x2.4	o 形橡胶密封圈 50x2.4	2

序号	Name	零件名称	数量
49	Gear Chamber	齿轮室	1
50	Fixing Pin	定位销	2
51	Gasket For Axle 11	轴用钢丝挡圈 11	2
52	Column Pin 2.5	圆柱销 2.5	1
53	Gear Axle	齿轮轴	1
54	Gear	齿轮	2
55	Inner Hexagonal Nut m8x30	内六角圆柱头螺钉 m8x30	3
56	Washer 8	弹簧垫圈 8	9
57	Oil Pump Cover	泵盖	1
58	Bolt m8x55	外六角螺栓 m8x55	6
59	o-Ring Oil Seal 16x2.65	o 形橡胶密封圈 10.6x2.65	2
60	Plastic Slide	塑料衬垫	2
61	Log Pusher	圆木推进器	1
62	o-Ring Seal Oil 50x2.65	o 形橡胶密封圈 50x2.65	1
63	Hex Screw Plug m8x10	外六角螺塞 m8x10	1
64	Combination Washer 8	组合垫圈 8	1
65	Screw Plug For Valve	阀体螺堵	1
66	Combination Washer 16	组合垫圈 16	1
67	Return Spring	滑阀回位弹簧	1
68	Inner Screw Plug	益流阀内螺堵	1
69	Valve Core	阀芯	1
70	Fix Screw m5x8	内六角圆柱端紧定螺钉 m5x8	1
71	Clip 6	开口挡圈 6	1
72	o-Ring Oil Seal 14x1.9	o 形橡胶密封圈 14x1.9	5
73	Return Spring For Valve Spring	阀芯回位弹簧	1
74	Adjustable Pressure Spring	益流阀调压弹簧	1
75	Valve Cover	阀套	1
76	o-Ring Oil Seal 6x1.5	o 形橡胶密封圈 6x1.5	1
77	Steel Ball For Valve φ6	钢球 φ6	1
78	Cylinder Front Cover	油缸前盖	1
79	Gasket 10	平垫圈 10	8
80	Hexagonal Nut m10	六角螺母 m10	4
81	Guard Pad	护板垫块	1
82	Handle Guard	手柄护板	1
83	Wheel Cap	轮盖	2
84	Shaft Clip 13	轴用弹性挡圈 13	2
85	Wheel	轮子	2
86	Wheel Frame	轮子支架	1
87	Cover Nut	盖形螺母	3
88	Handle Bar	操纵手柄	1
89	Handle Fixer	手柄螺帽	1
90	Handle Bar Cover	手柄套	1